Electrolux PROFESSIONAL

Modular Cooking Range Line 900XP 6-Burner Gas Boiling Top, 7.5 kW - Town Gas

ITEM #

MODEL #

NAME #

SIS #

AIA #

391196 (E9GCTL6C0M) 6-Burner (7,5 kW each) gas Boiling Top - town gas

Short Form Specification

Item No.

To be installed on open base installations, bridging supports or cantilever systems. High efficiency flower flame burners with continuous power regulation and optimized combustion. Flame failure device as standard on burners to protect against accidental extinguishing. Exterior panels of unit in stainless steel with Scotch Brite finish. Pan supports in heavy duty cast iron. Extra strength work top in heavy duty 2 mm stainless steel. Right-angled side edges to allow flush-fitting junction between units.

APPROVAL:

Main Features

- Unit to be mounted on open base cupboards, bridging supports or cantilever systems.
- The six 7.5 kW high efficiency burners are available in 100 mm diameter with continuous power regulation.
- Gas appliance supplied for use with town gas.
- Large sized pan support in cast iron (stainless steel as option) with long center fins to allow the use of the largest down to the smallest pans.
- Burners with optimized combustion.
- Flame failure device on each burner protects against gas leakage when accidental extinguishing of the flame occurs.
- Protected pilot light.
- The special design of the control knob system guarantees against water infiltration.
- IPx4 water protection.
- Suitable for countertop installation.

Construction

- Unit is 930 mm deep to give a larger working surface area.
- All exterior panels in Stainless Steel with Scotch Brite finishing.
- AISI 304 stainless steel worktop, 2mm thick.
- Model has right-angled side edges to allow flush fitting joints between units, eliminating gaps and possible dirt traps.

Optional Accessories

- Junction sealing kit PNC 206086 ❑
- Draught diverter, 150 mm diameter PNC 206132 ❑
- Matching ring for flue condenser, 150 mm diameter PNC 206133 ❑
- Support for bridge type installation, 1200mm PNC 206139 ❑
- Support for bridge type installation, 1400mm PNC 206140 ❑
- Support for bridge type installation, 1600mm PNC 206141 ❑
- Single burner smooth plate for direct cooking - fits frontal burners only PNC 206171 ❑
- Single burner ribbed plate for direct cooking - fits frontal burners only PNC 206172 ❑
- Flue condenser for 1 module, 150 mm diameter PNC 206246 ❑
- Water column with swivel arm (water column extension not included) PNC 206289 ❑

• Water column extension for 900 line	PNC 206290	❑
• Stainless steel double grid for 2 burners	PNC 206298	❑
• Chimney upstand, 1200mm	PNC 206306	❑
• Back handrail 1200 mm	PNC 206309	❑
• Wok pan support for open burners (700/900)	PNC 206363	❑
• Kit town gas nozzles (G150) for 900 gas boiling top	PNC 206384	❑
• Side handrail-right/left hand (900XP)	PNC 216044	❑
• Frontal handrail, 1200mm	PNC 216049	❑
• Frontal handrail, 1600mm	PNC 216050	❑
• 2 side covering panels for top appliances	PNC 216278	❑
• Universal frying pan with stainless steel handle (diam. 240mm) suitable for induction and all other heating sources	PNC 653597	❑
• Pressure regulator for gas units	PNC 927225	❑

The company reserves the right to make modifications to the products without prior notice. All information correct at time of printing.

2024.10.06

Modular Cooking Range Line 900XP 6-Burner Gas Boiling Top, 7.5 kW - Town Gas

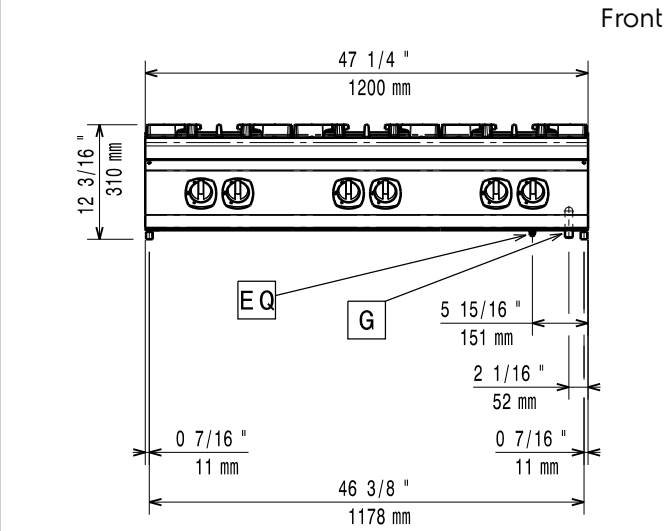

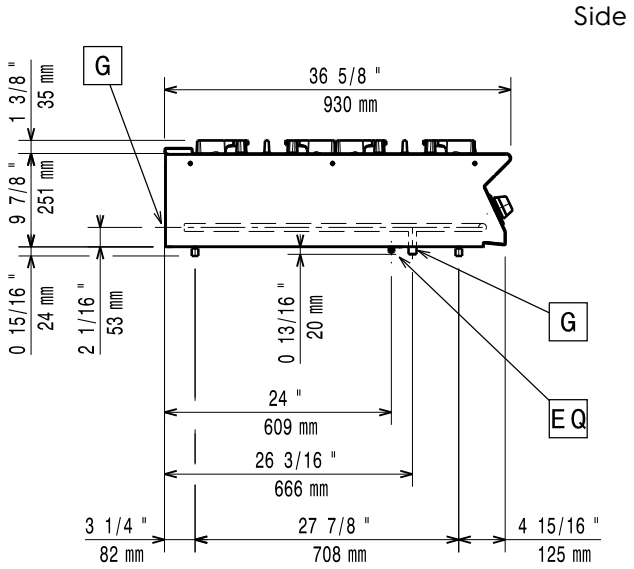

G = Gas connection

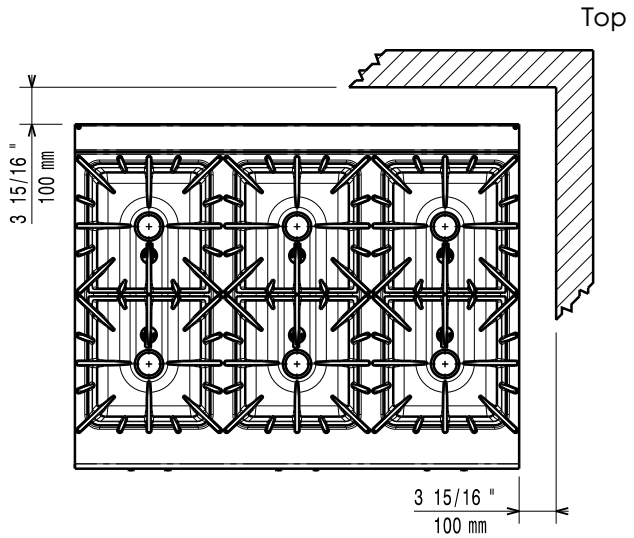

Gas

Gas Power:	
391196 (E9GCTL6C0M)	60 kW
Standard gas delivery:	Natural Gas G20 (20mbar)
Gas Type Option:	LPG;Town Gas
Gas Inlet:	1/2"

Key Information:

Front Burners Power:	7.5 - 7.5 kW
Back Burners Power:	7.5 - 7.5 kW
Middle Burners Power:	7.5 - 0/7.5 - 0 kW
Back Burners Dimension - mm	Ø 100 Ø 100
Front Burners Dimension - mm	Ø 100 Ø 100
Middle Burners Dimension - mm	Ø 100 Ø 100
External dimensions, Width:	1200 mm
External dimensions, Depth:	930 mm
External dimensions, Height:	250 mm
Net weight:	90 kg
Shipping weight:	110 kg
Shipping height:	540 mm
Shipping width:	1020 mm
Shipping depth:	1300 mm
Shipping volume:	0.72 m³

If appliance is set up or next to or against temperature sensitive furniture or similar, a safety gap of approximately 150 mm should be maintained or some form of heat insulation fitted.

Certification group:	N9CT

The company reserves the right to make modifications to the products without prior notice. All information correct at time of printing.

2024.10.06